* g_m Calculations: We take a transistor and place it in forward active region. Now we increase V_{BE} by a small amount so we take a variable voltage for V_{BE}. V_{CE} is constant.

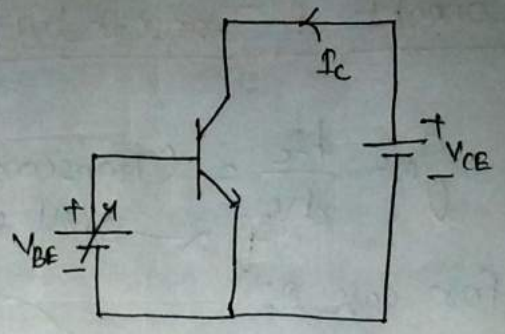

Lecture – 16

* I-V characteristics :-

→ In I_c v/s V_{BE} characteristics, V_{CE} is taken as constant and in I_c v/s V_{CE}, V_{BE} is taken as constant.

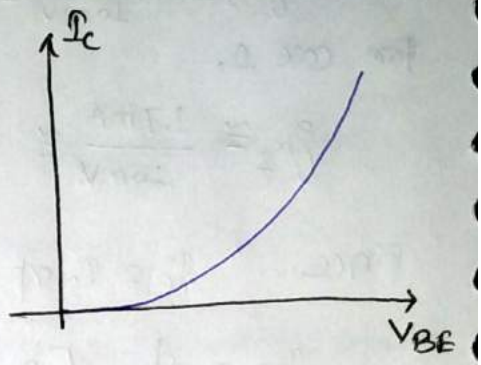

→ Because of the flat line present in I_c/V_{CE} characteristics, the transistor acts as a current source

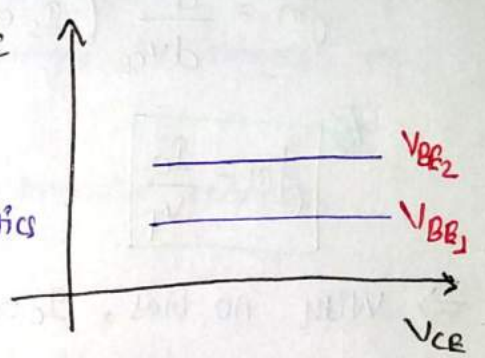

→ Combining time response with I-V characteristics

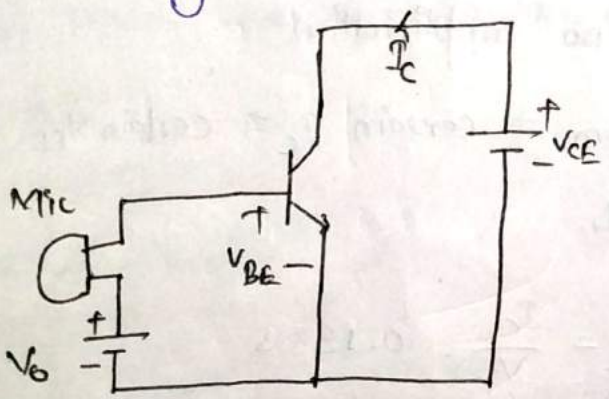

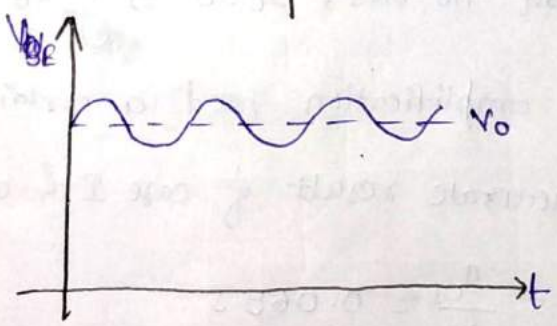

→ * When the no signal in mic then V_{BE} is V_0 therefore when mic gets a signal then V_{BE} propagate up and down over V_0.

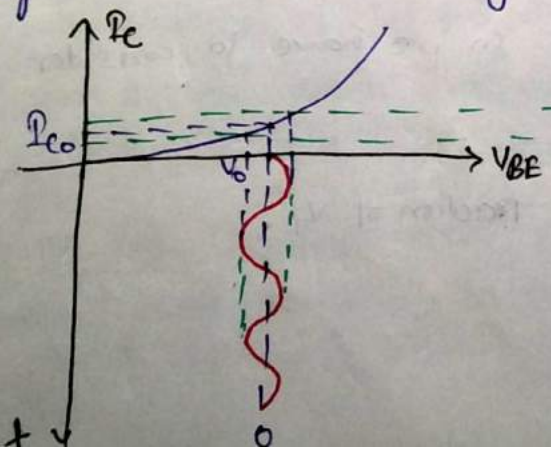

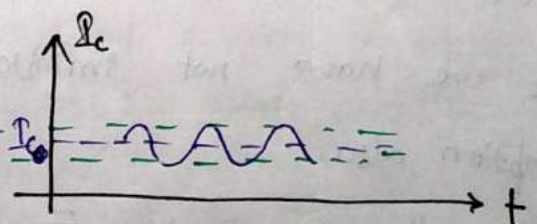

Scanned by CamScanner

* For I_C v/s t, we take I_C v/s V_{BE} plot and use V_{BE} v/s t to plot I_C v/s t. We just project the V_{BE} v/s t then we plot another plane I_C v/s t.

* In the absence of mic signal V_{BE} is V_0 so collector current is some amount i.e. bias value I_0.

* Simple Bipolar Transistor Model:-

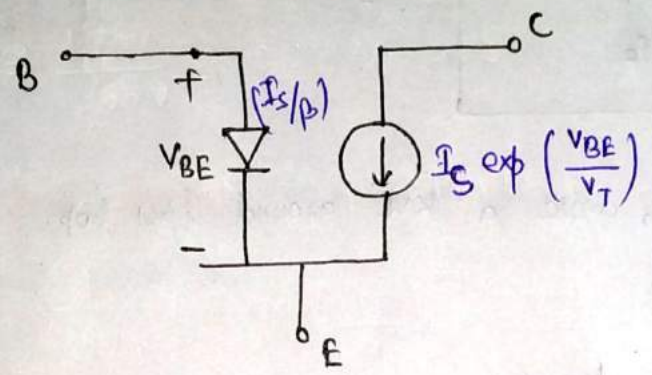

* In this, a voltage dependent current source is present which is non linear current source because it is related to V_{BE} by exp. function.

* The current source is connected to the emitter because it can not connect to base as base current is so small as compared to collector current.

* For obtaining base current for model, we use,

$$I_B = \frac{I_C}{\beta} = \frac{I_S}{\beta} \exp\left(\frac{V_{BE}}{V_T}\right)$$

for this type of characteristics we have diode which has reverse saturation current (I_S/β).

* This transistor model is valid only in forward Active region.

Scanned by CamScanner

Example: $I_S = 5\times10^{-16}\,A$

Replace this ckt by the model

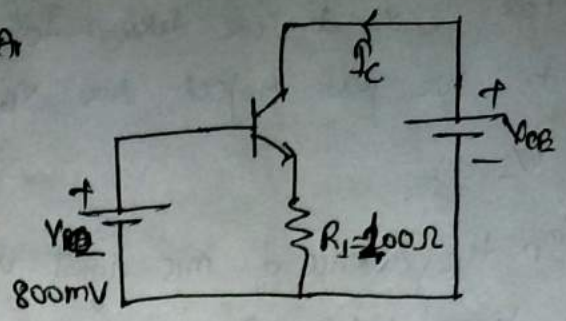

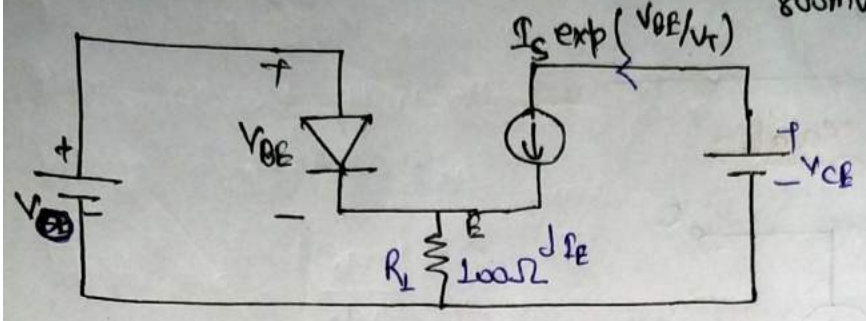

we assume that $I_E \simeq I_C$, write a KVL around first loop

$$V_0 = V_{BE} + I_E R_1$$

since $V_{BE} = V_T \ln\left(\frac{I_C}{I_S}\right)$ therefore

$$V_0 = V_T \ln\left(\frac{I_C}{I_S}\right) + I_C R_1$$

$$\Rightarrow \quad V_0 - I_C R_1 = V_T \ln\left(\frac{I_C}{I_S}\right)$$

Evaluated by iteration only

Guess $I_C = 1\,mA$

$I_C = 0.636\,mA$

$I_C = 0.753\,mA$

$I_C = 0.71\,mA$

and this gradually converging.

Example:

Signal of mic $= V_m \sin\omega t$

$$V_0 + V_m \sin\omega t - R_1 I_C = V_T \ln\left(\frac{I_C}{I_S}\right)$$

from previous example

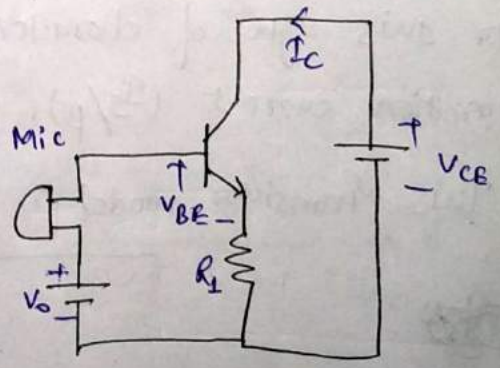

Now, in this case I_C depends on time because of signal of mic.

Scanned by CamScanner

Example: KVL in B-E loop,

$V_{BE} = V_0 + V_m \sin\omega t$

$\Rightarrow I_C = I_S \exp\left(\frac{V_0 + V_m \sin\omega t}{V_T}\right)$

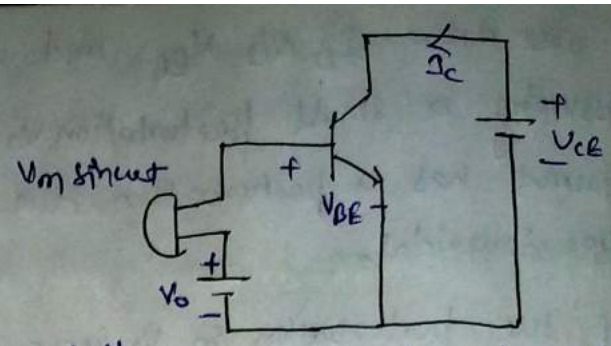

From this relation I_C is not sinusoidal because it is exponential of sinusoidal.

---

* **Large signal operation:-** The signal coming to the circuit is arbitrarily large.

* **"Small-signal" operation:-** The signal perturbs the bias (operating point) by only a small amount.

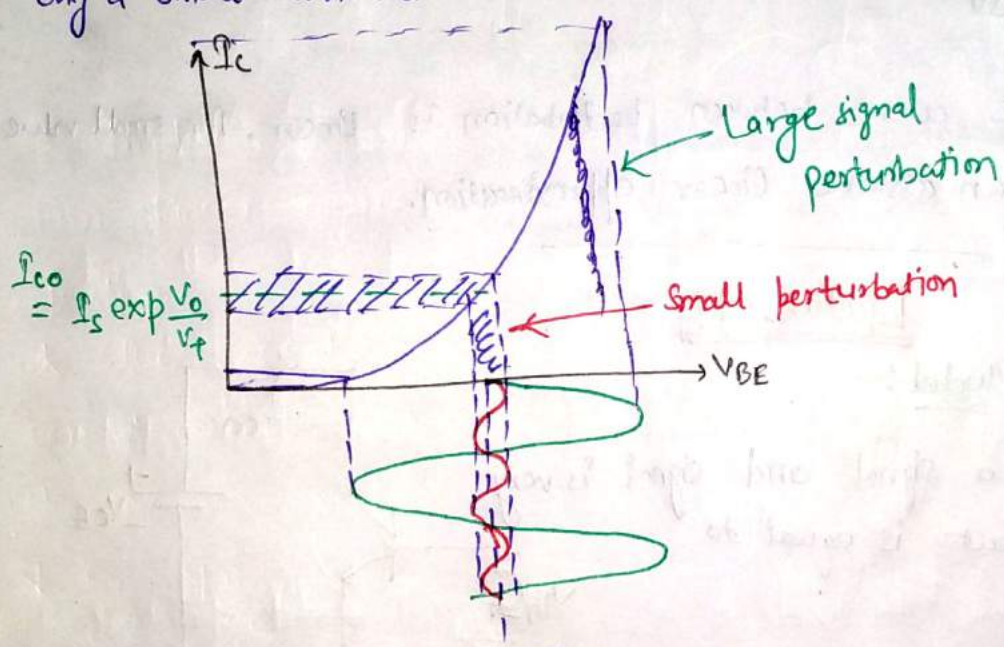

$$I_C = I_S \exp\left(\frac{V_0}{V_T}\right) \exp\left(\frac{V_m \sin\omega t}{V_T}\right)$$

assume it is less than 1

$\exp(\varepsilon) \approx 1, \ \varepsilon \ll 1$

We assume $V_m \ll V_T$

$$\approx I_S \exp\frac{V_0}{V_T}\left(1 + \frac{V_m \sin\omega t}{V_T}\right) = I_{CO} + \frac{I_{CO}}{V_T} V_m \sin\omega t$$

In small signal operation:-

1. I_C varies sinusoidally
2. $I_C \approx I_{CO} + g_{mo} V_m \sin\omega t$

Scanned by CamScanner

* If we draw I_D v/s V_{BE} and we are assuming a small perturbation V_0. The current has a perturbation due to V_0 is also sinusoidal.

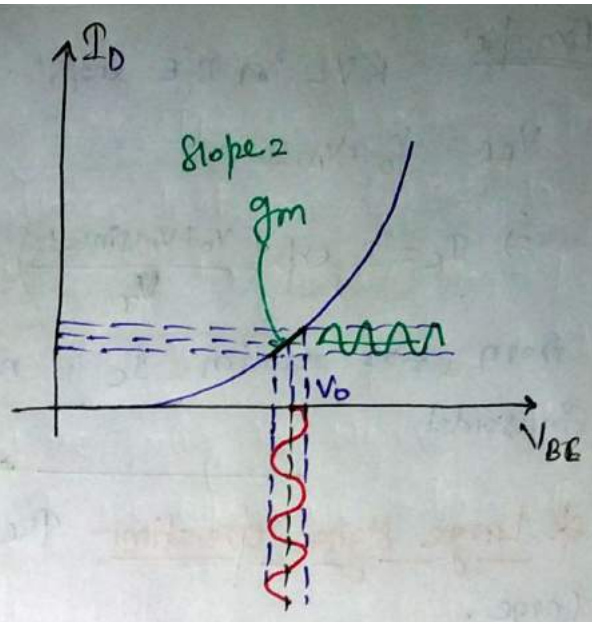

* If the perturbation in V_0 is very small then current fluctuation is given by voltage fluctuation times g_m.

derivative = $\frac{dI}{dV}$

$\Rightarrow$ dI = derivative . dV

$\Rightarrow$ $\Delta I = g_m . \Delta V$

We assume the curve between perturbation is linear. for small value fluctuation, we can assume linear approximation.

Lecture-17

* Small Signal Model :-

→ When we apply a signal and signal is very small then current is equal to

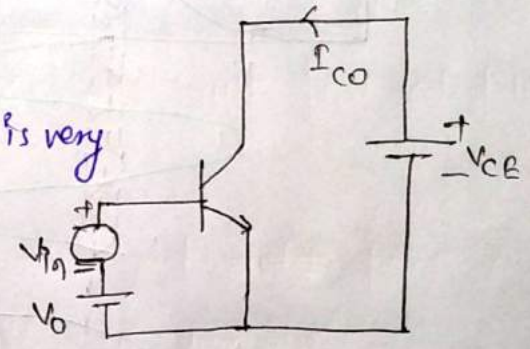

$I_c = I_{co} + g_m V_{in}$

original collector current in absence of applied signal

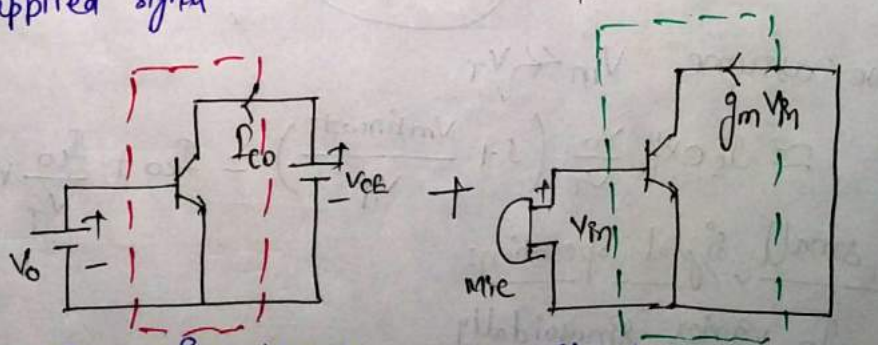

Circuit in absence of absence of applied signal

Circuit when signal is applied

* If we have value of V_0 and we want to calculate the value of I_{CO}

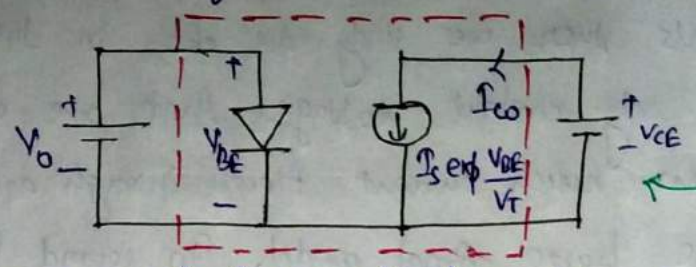

← Large signal model

Here we have used large signal model because V_0 is not a small signal as compared to V_T (800 mV >> 26 mV).

* For second one ckt, we use this to model second ckt.

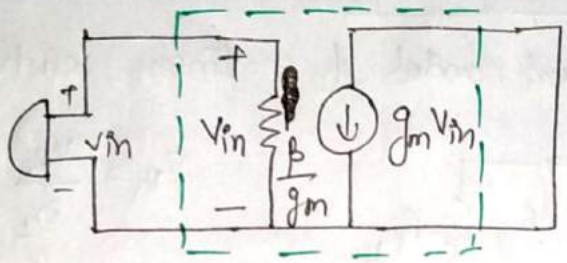

← Small signal model

* In this we don't have exponential ~~dependence~~. dependence. It has linear term because if we see the plot of small signal perturbation curve is an approximate linear curve for small signal.

* Since $I_B = \frac{I_C}{\beta} = \frac{I_{CO} + g_m V_{in}}{\beta} = \frac{I_{CO}}{\beta} + \frac{g_m V_{in}}{\beta}$ ← For small signal model

↑ For large signal model

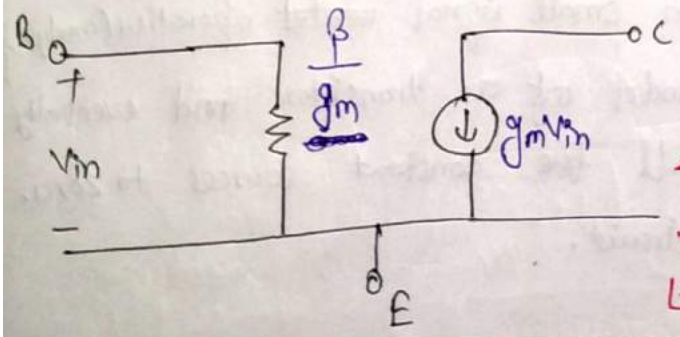

← Completed small signal model

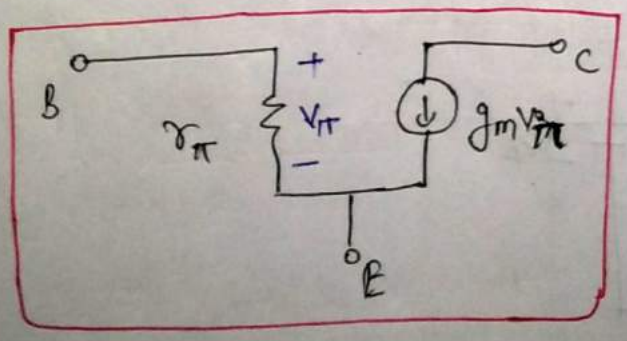

More general model

Here $r_\pi = \frac{\beta}{g_m}$

* If we have given a circuit that has some bias components and some signal components then we study the ckt in two phases, in one phase we consider only constant voltages that are applied to the ckt and see how much current flow through each terminal. For this phase we use Large signal model. In second phase, calculate the response of ckt to small signal that are coming in. We use small signal model for this phase. After that we superimpose both result to get total response.

Example: Find the small signal model of a linear resistor.

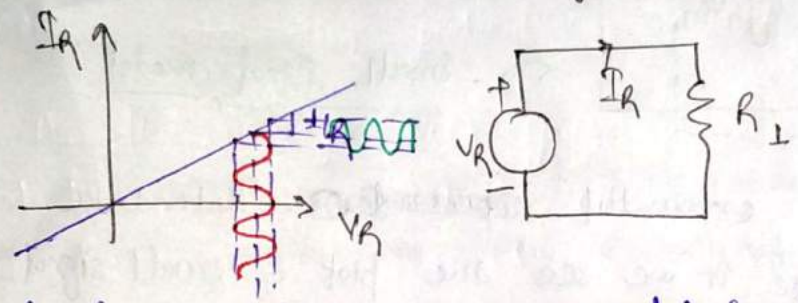

$$I_R = \frac{V_R}{R_L}$$

$$\Delta I_R = \frac{1}{R} \Delta V_R$$

A linear resistor has same model for large signal and small signal because of linear curve. It has constant slope i.e. constant g_m.

---

* To find small signal parameters, we must first calculate the bias conditions (V_{BE}, I_C).

Question:- What happens to batteries in small signal ~~model~~ operation (analysis)?

When we draw small signal model of a transistor and eventually of a complete circuit we set all the constant sources to zero.

⇒ Replace them with a short circuit.

Example:

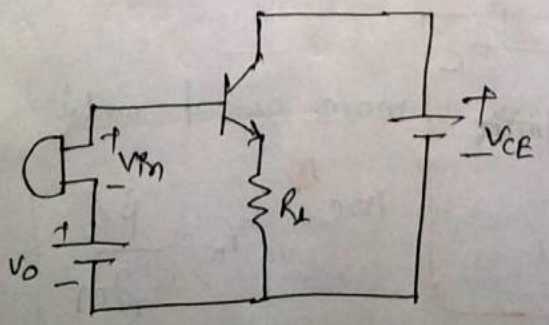

Scanned by CamScanner

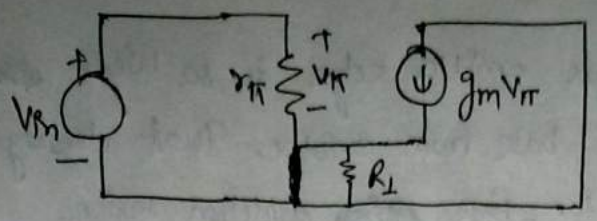

← Equivalent small signal model of given ckt

The V_π represents the change in V_{BE} not a V_{BE} voltage. Therefore $g_m V_\pi$ is change in I_C.

Quiz Draw small signal equivalent model

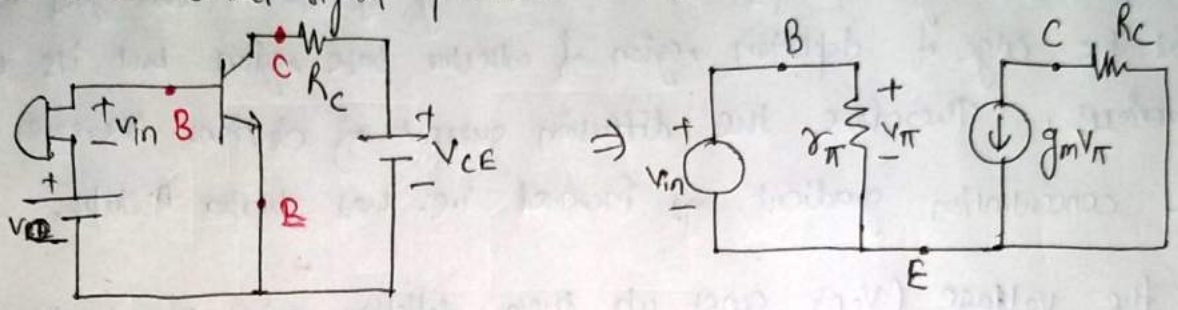

Notation:- Large signal quantities — uppercase $V_{in}, I_C, V_{BE}, V_{CE}$ - ~

Small signal quantities — lower case letters. $v_{in}, i_c, v_{be}, v_{ce}$ - ~

Early Effect:-

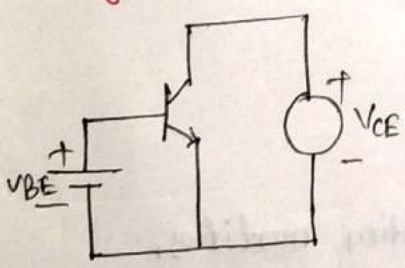

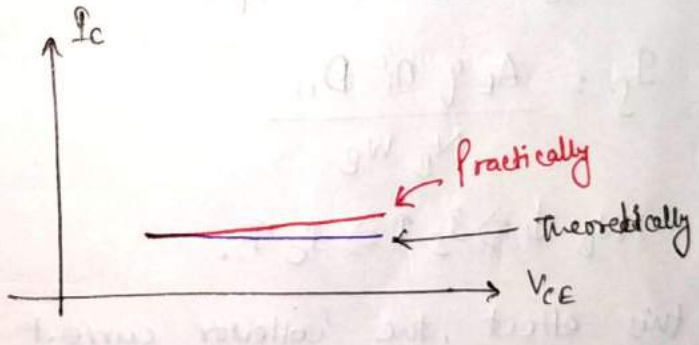

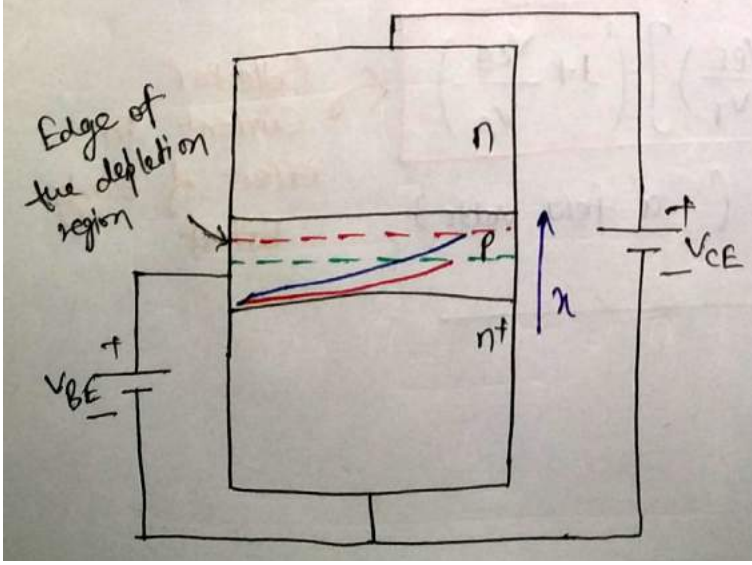

* Lots of electrons go from emitter cross the depletion through the base region and they go and close to depletion region of collector base and they quickly absorbed and accelerated , they go to

Collector. They are collected by collector.

* The density of electrons at the base emitter edge is so high because they have just entered into base from emitter. That density goes to zero at the edge of collector - base depletion region.

* Since collector base region is reverse biased so same as diode when we increase reverse biased voltage then the depletion layer becomes wider. When the depletion region shifts then the density of electrons goes to zero at the edge of depletion region of collector base region but its sharper than previous. Therefore the diffusion current of electrons increases because concentration gradient has increased i.e. has sharper slope.

* As the voltage (V_{CE}) goes up then depletion region becomes wider and the actual base width or effective base width decreases therefore concentration gradient increased so collector current increases.

$$I_C = I_S \exp\left(\frac{V_{BE}}{V_T}\right)$$

$$\Rightarrow \quad I_S = \frac{A_E q n_i^2 D_n}{N_B W_B}$$

So $W_B \downarrow \Rightarrow I_S \uparrow \Rightarrow I_C \uparrow$.

* For this effect, the collector current equation modifies,

$$\boxed{I_C = \left[I_S \exp\left(\frac{V_{BE}}{V_T}\right)\right]\left(1 + \frac{V_{CE}}{V_A}\right)}$$

Collector Current in effect of Early Effect

Where V_A = early voltage (a few volts)